EVAL_PMG1_S1_DRP KIT

CONTENTS

PAGE	DESCRIPTION
01	TITLE & TABLE OF CONTENTS
02	BLOCK DIAGRAM
03	KITPROG3
04	INPUT POWER & SYSTEM REGULATOR
05	PMG1-S1 CONTROLLER
06	PD REGULATOR
07	POWER PATH & TYPE-C CONNECTOR
08	ACCESSORIES
09	REVISION HISTORY

Drawing Numbers	
PCBA	121-60656-01
PCB	600-60656-01
FAB DRW	610-60656-01
ASSY DRW	620-60656-01
SCH DRW	630-60656-01

Legal Disclaimer :
The information given in this document shall in no event be regarded as a guarantee of conditions or characteristics. With respect to any examples or hints given herein, any typical values stated herein and/or any information regarding the application of the device, Infineon Technologies hereby disclaims any and all warranties and liabilities of any kind, including without limitation, warranties of non-infringement of intellectual property rights of any third party.

SCH Title : EVAL_PMG1_S1_DRP KIT				
Page Title: TITLE & TABLE OF CONTENTS				
Size	Document Number	Drawn By	Approved By	Rev
A3	630-60656-01	HUSA	GUBILI	04
Date: Tuesday, May 21, 2024		Sheet 1 of 9		

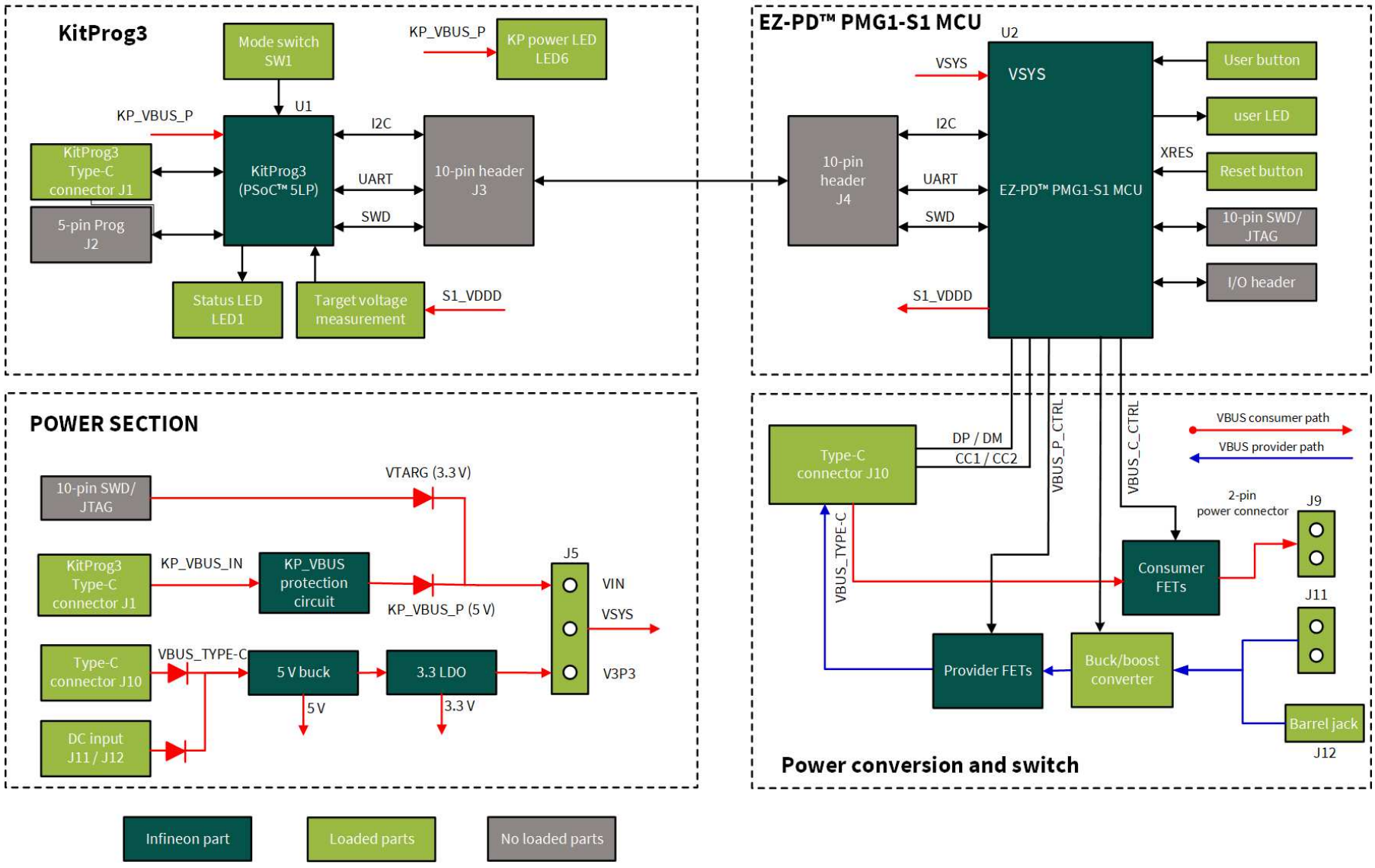

Legal Disclaimer :
The information given in this document shall in no event be regarded as a guarantee of conditions or characteristics. With respect to any examples or hints given herein, any typical values stated herein and/or any information regarding the application of the device, Infineon Technologies hereby disclaims any and all warranties and liabilities of any kind, including without limitation, warranties of non-infringement of intellectual property rights of any third party.

SCH Title : EVAL_PMG1_S1_DRP KIT				
Page Title: BLOCK DIAGRAM				
Size	Document Number	Drawn By	Approved By	Rev
A3	630-60656-01	HUSA	GUBILI	04
Date: Tuesday, May 21, 2024		Sheet 2 of 9		

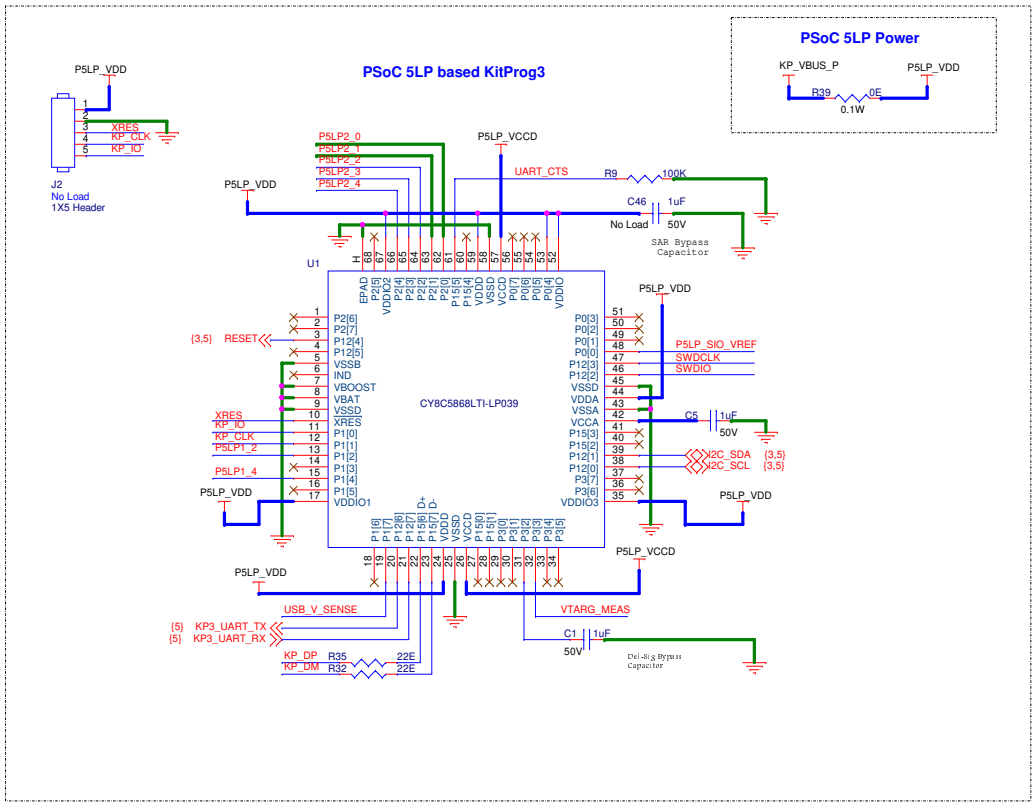

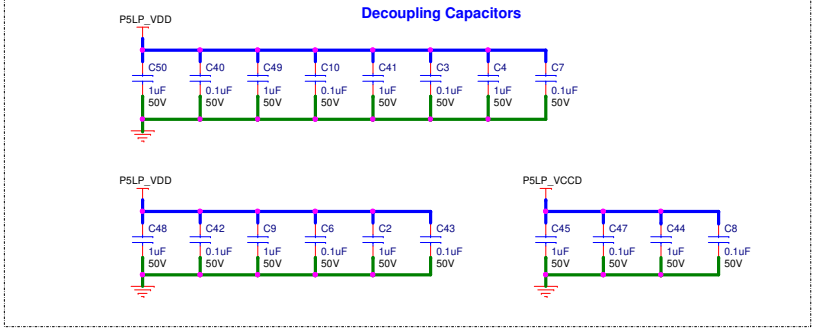

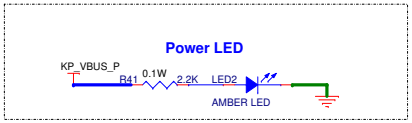

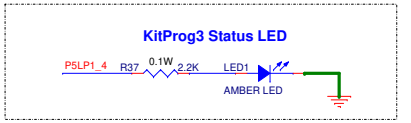

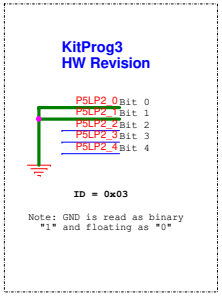

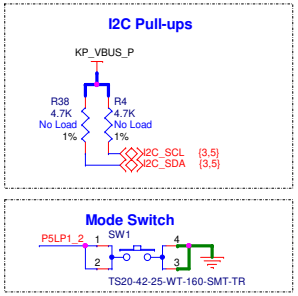

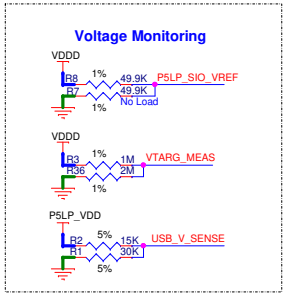

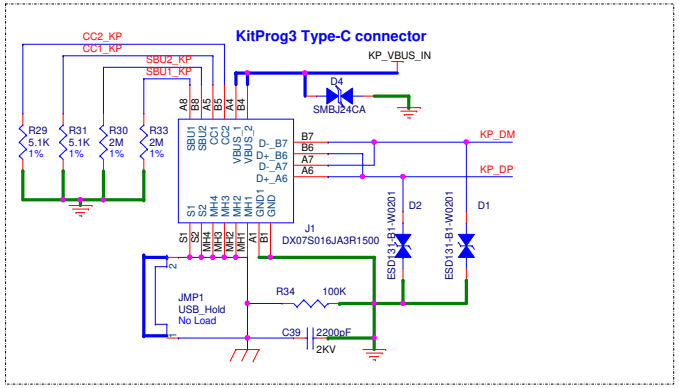

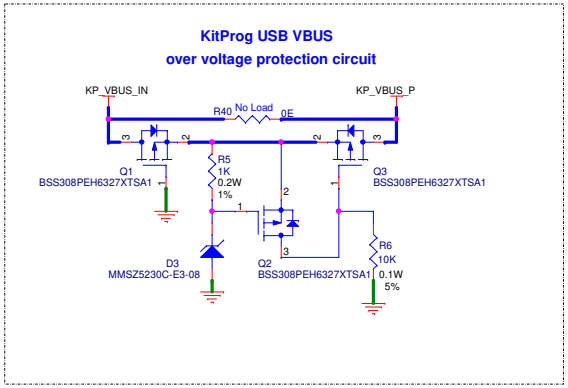

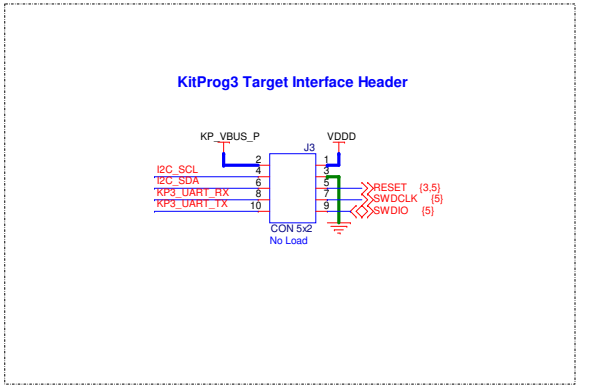

Legal Disclaimer :
The information given in this document shall in no event be regarded as a guarantee of conditions or characteristics. With respect to any examples or hints given herein, any typical values stated herein and/or any information regarding the application of the device, Infineon Technologies hereby disclaims any and all warranties and liabilities of any kind, including without limitation, warranties of non-infringement of intellectual property rights of any third party.

SCH Title : EVAL_PMG1_S1_DRP KIT				
Page Title: KITPROG3				
Size	Document Number	Drawn By	Approved By	Rev
A3	630-60656-01	HUSA	GUBILI	04
Date: Tuesday, May 21, 2024		Sheet 3 of 9		

DC POWER INPUT

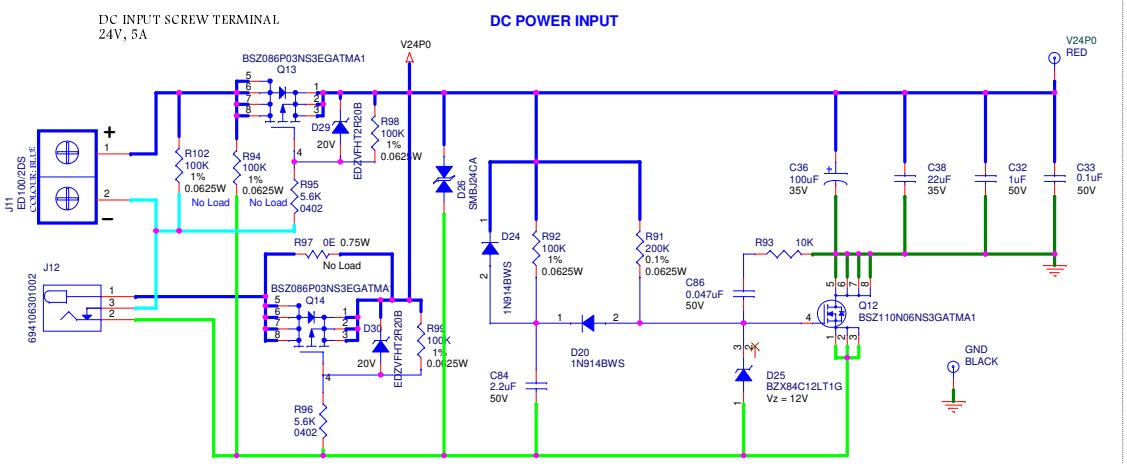

3.3V FIXED VOLTAGE LDO - 400mA

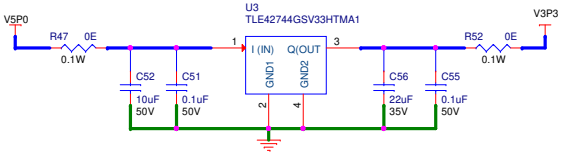

DC/DC Converter - 5V @ 2.5A

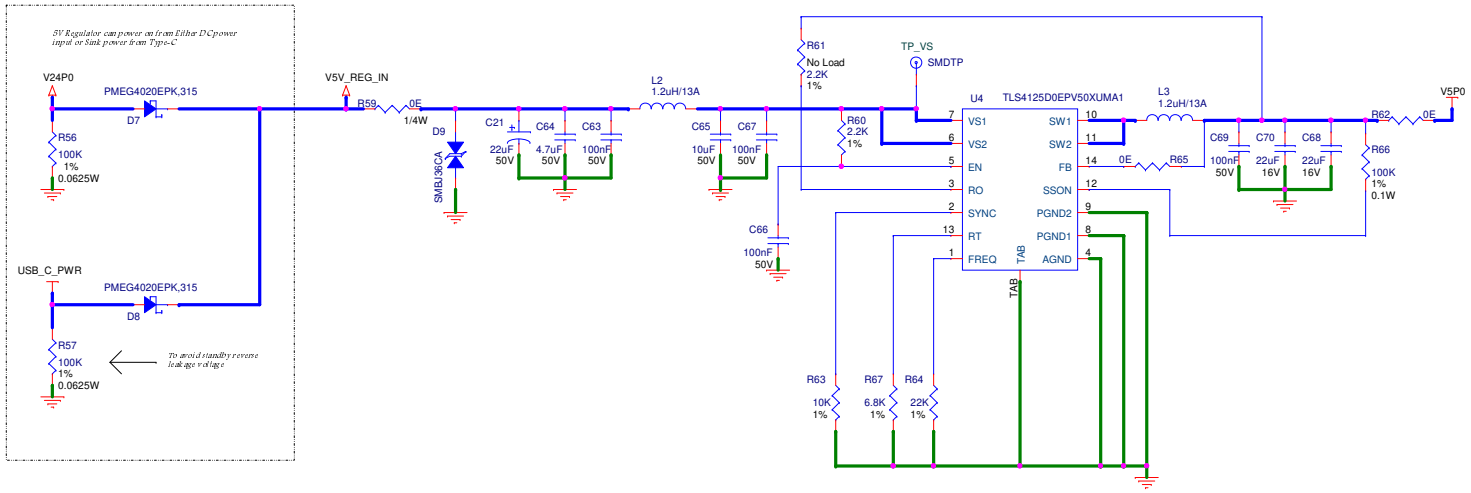

Legal Disclaimer :
The information given in this document shall in no event be regarded as a guarantee of conditions or characteristics. With respect to any examples or hints given herein, any typical values stated herein and/or any information regarding the application of the device, Infineon Technologies hereby disclaims any and all warranties and liabilities of any kind, including without limitation, warranties of non-infringement of intellectual property rights of any third party.

SCH Title : EVAL_PMG1_S1_DRP KIT				
Page Title: INPUT POWER & SYSTEM REGULATOR				
Size	Document Number	Drawn By	Approved By	Rev
A3	630-60656-01	HUSA	GUBILI	04
Date: Tuesday, May 21, 2024		Sheet 4 of 9		

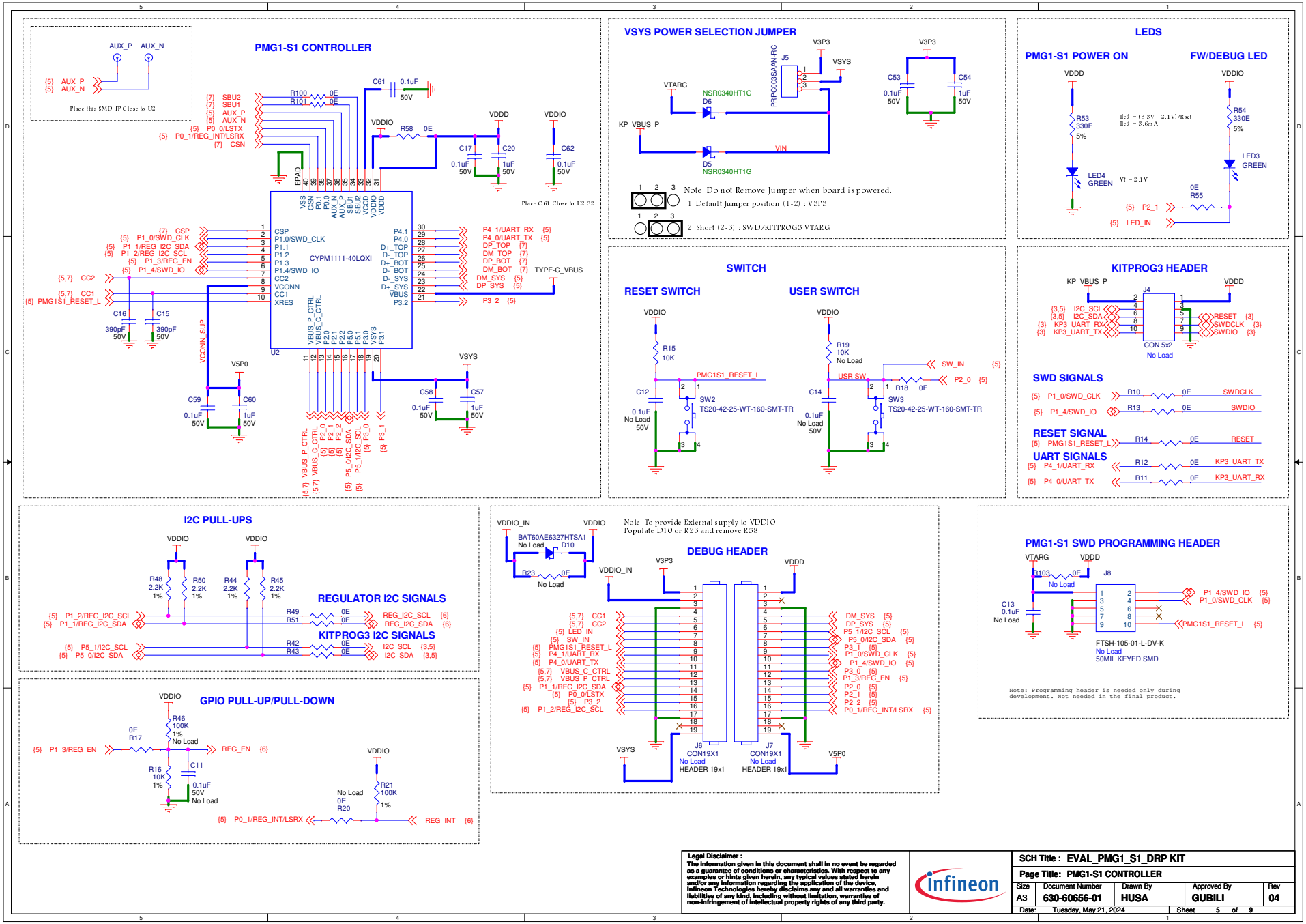

Legal Disclaimer :
The information given in this document shall in no event be regarded as a guarantee of conditions or characteristics. With respect to any examples or hints given herein, any typical values stated herein and/or any information regarding the application of the device, Infineon Technologies hereby disclaims any and all warranties and liabilities of any kind, including without limitation, warranties of non-infringement of intellectual property rights of any third party.

SCH Title : EVAL_PMG1_S1_DRP KIT				
Page Title: PMG1-S1 CONTROLLER				
Size	Document Number	Drawn By	Approved By	Rev
A3	630-60656-01	HUSA	GUBILI	04
Date: Tuesday, May 21, 2024			Sheet 5 of 9	

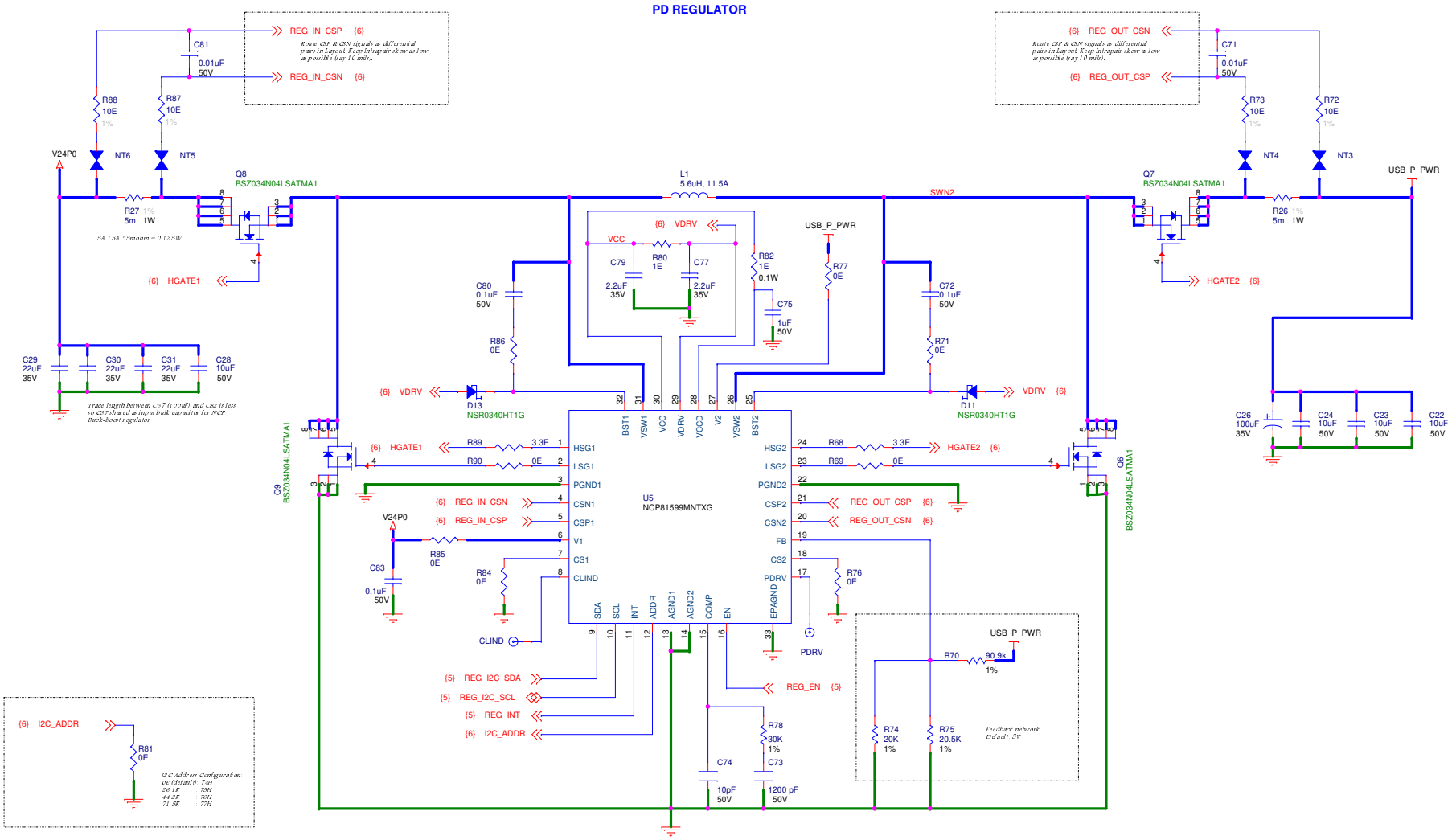

Legal Disclaimer :
The information given in this document shall in no event be regarded as a guarantee of conditions or characteristics. With respect to any examples or hints given herein, any typical values stated herein and/or any information regarding the application of the device, Infineon Technologies hereby disclaims any and all warranties and liabilities of any kind, including without limitation, warranties of non-infringement of intellectual property rights of any third party.

SCH Title : EVAL_PMG1_S1_DRP KIT				
Page Title: PD REGULATOR				
Size	Document Number	Drawn By	Approved By	Rev
A3	630-60656-01	HUSA	GUBILI	04
Date: Tuesday, May 21, 2024		Sheet 6 of 9		

VBUS POWER PATH

VBUS PROVIDER PATH

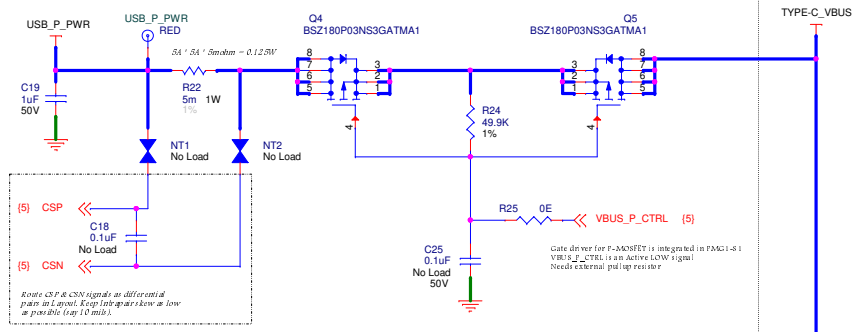

VBUS Consumer Path Control

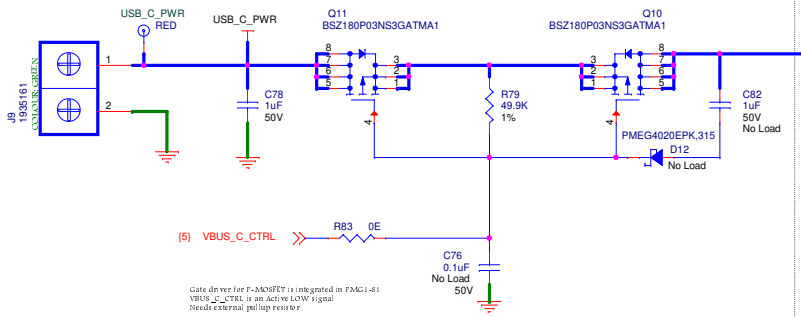

TYPE-C CONNECTOR

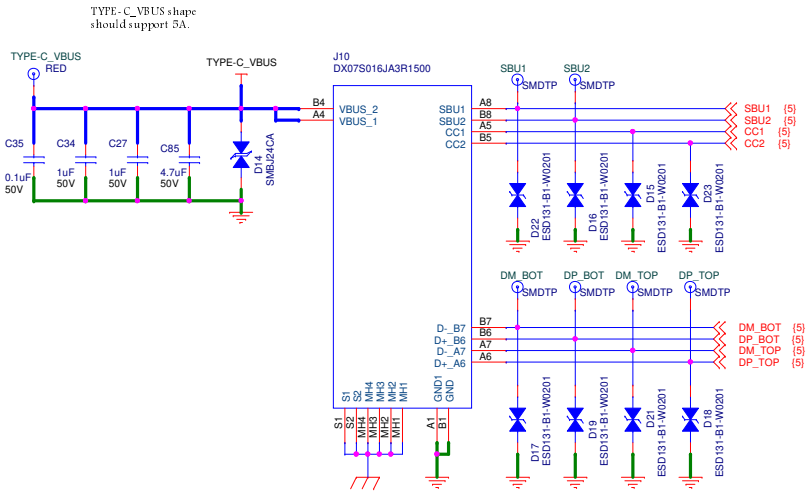

USB SHIELD

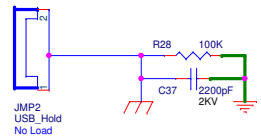

Legal Disclaimer :
The information given in this document shall in no event be regarded as a guarantee of conditions or characteristics. With respect to any examples or hints given herein, any typical values stated herein and/or any information regarding the application of the device, Infineon Technologies hereby disclaims any and all warranties and liabilities of any kind, including without limitation, warranties of non-infringement of intellectual property rights of any third party.

SCH Title : EVAL_PMG1_S1_DRP KIT				
Page Title: POWER PATH & TYPE-C CONNECTOR				
Size	Document Number	Drawn By	Approved By	Rev
A3	630-60656-01	HUSA	GUBILI	04
Date: Tuesday, May 21, 2024		Sheet 7 of 9		

Accessories

PCBA label

LBL PCA Label



Jumper Shunt

M7581-05



Bumper

SJ61A6 SJ61A6 SJ61A6 SJ61A6

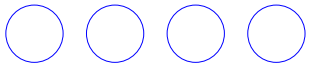

SJ61A6



Legal Disclaimer :
The information given in this document shall in no event be regarded as a guarantee of conditions or characteristics. With respect to any examples or hints given herein, any typical values stated herein and/or any information regarding the application of the device, Infineon Technologies hereby disclaims any and all warranties and liabilities of any kind, including without limitation, warranties of non-infringement of intellectual property rights of any third party.

SCH Title : EVAL_PMG1_S1_DRP KIT				
Page Title: ACCESSORIES				
Size	Document Number	Drawn By	Approved By	Rev
A3	630-60656-01	HUSA	GUBILI	04
Date: Tuesday, May 21, 2024		Sheet 8 of 9		

REVISION HISTORY

REVISION NO	DESCRIPTION OF CHANGE'	RELEASE DATE	RELEASE NOTES
REV 01	INITIAL RELEASE		
REV 02	1. Replaced the reverse diode D27 and D28 with FET 2. R60 mounted to enable the 5V regualtor 3. Onsemi Buck boost FET and indcutor changed for thermal concerns 4. Updated netnames of SW_IN and LED_IN 5. Compensation circuit of Onsemi buck boost is optimised for 300khz frequency - R78 changed to 30K and C73 changed to 1.2nF 6. LED4 supply changed to V3P3 7. Updated note for D10 and R28 mounting 8. SW1,SW2 and SW3 were replaced with `434123025826 for better reliability. 9. Removed TP_VCC test point and added 0E in series with SBU lines. 10. R102 added. 11. TP_SYNC removed, TP_VS changed to SMD test point.	08-08-2023	
REV 03	1. Switch MPN changed to 2. power LED connected to VDDD 3. Added R103	18-01-2024	
REV 04	1. Added polarity marking for J11 2. Q13,Q14 pin number made visible and pin name invisible. 3. J11.2 to J12.3 connection colour changed to Cyan 4. Default wiring colour given as Blue 5. Provided net name for J5.3 as VIN 6. Block diagram is updated 7. All Power lines are changed to thick blue	21-05-2024	

Legal Disclaimer :
The information given in this document shall in no event be regarded as a guarantee of conditions or characteristics. With respect to any examples or hints given herein, any typical values stated herein and/or any information regarding the application of the device, Infineon Technologies hereby disclaims any and all warranties and liabilities of any kind, including without limitation, warranties of non-infringement of intellectual property rights of any third party.